11mm Size Series Encoders

Water-Proof Type (IPX7)

TOP-UP

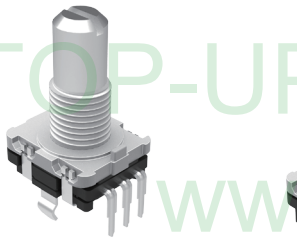

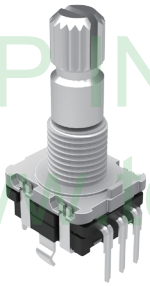

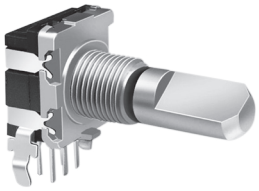

▲FEATURE

- High-precision rotary type encoder.
- Compact design, long life and high reliability.
- Low cost as compared with optical type.
- Available in a wide variety of line up to meet all user needs.
- Support waterproof function (IPX7).

▲APPLICATIONS

- All kinds of level control, tuning and timer setting in audio-visual equipment, ordinary household electric appliances, radio equipment, communications equipment, etc.

Common Specifications

Pulse	Number of detent	Phase difference (msec)	Chattering (msec)	Sliding noise (msec)	Insulation resistance	Dielectric strength	Detent torque (gf.cm)	Rotational life (cycle)
8	0	6	3	3	250VDC 100MΩ MIN	300V AC 1 min	10~80 (0 DETENT: 50gf.cm max.)	15,000
	16							
15	0	6	2	2				
	30							
16	0	4	3	3				1,000,000
	16							
20	0	4	2	2				
	20							

Switch Specifications

Rating	Contact resistance	Insulation resistance	Dielectric strength	Contact arrangement	Travel of switch(mm)	Operating force(gf)	Operating life(cycle)
DC 5V 10 mA	100mΩ	250V DC 100MΩ MIN	300V AC 1 min	PUSH ON	0.5	600±300	20,000
					1.5	400±200	

TOP-UP INDUSTRY CORP.
www.top-up.com.tw

TOP-UP

EC11MW Series Code Explanation

EC11MW	S	D	V	NB	A	F	X - D - 20	K - 20 - 20C	- □□□
1	2	3	4	5	6	7	8 9 10	11 12 13	14

TOP-UP INDUSTRY CORP.
www.top-up.com.tw

1. Product Lines of EC11MW (11mm Size Water-Proof Encoder IPX7)
2. Switch : S- With Switch ; Blank- Without Switch
3. Swtich Travel

Code	D	E
Travel	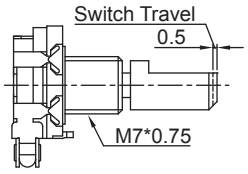	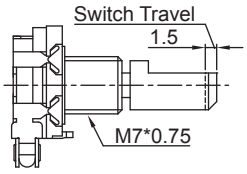

4. Horizontal Type - H ; Vertical Type - V
5. Type of Bushing

(With Screw)		(Without Screw)	
B (Standard)	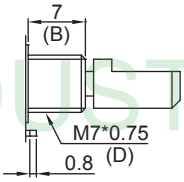	NB (Standard)	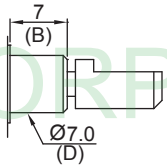

6. Bushing Material: Blank - Aluminum Alloy ; A - Zinc Alloy
7. With Frame: "F"
8. Frame Size

Code	W	X	Y	Z
Size	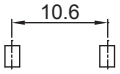		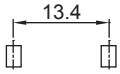	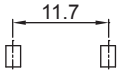

9. Type of Terminal

P.C.B Type			
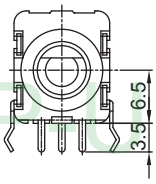	Horizontal B 	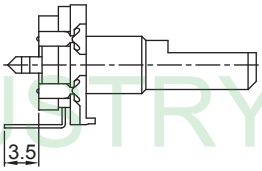	Vertical D 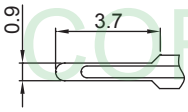

TOP-UP INDUSTRY CORP.
www.top-up.com.tw

EC11MW Series Code Explanation

EC11MW	S	D	V	NB	A	F	X -	D -	20	K -	20 -	20C -	□□□
1	2	3	4	5	6	7	8	9	10	11	12	13	14

TOP-UP INDUSTRY CORP.
www.top-up.com.tw

10. Shaft Length

11. Type of Shaft

K - Type						F - Type					
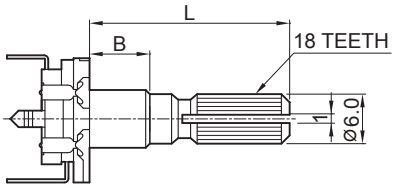						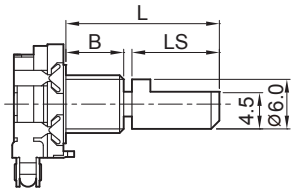					
B: 5mm			B: 7mm			B: 5mm			B: 7mm		
L	15	20	L	20	25	L	15	20	L	20	25
S - Type						R - Type					
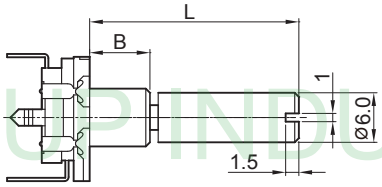						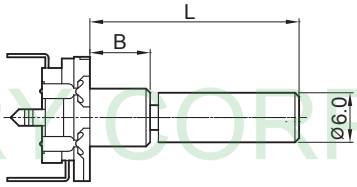					
B: 5mm			B: 7mm			B: 5mm			B: 7mm		
L	15	20	L	20	25	L	15	20	L	20	25

12. Output Pulse : 15 - 15Pulse

Pulse No.	8 Pulses	15 Pulses	16 Pulses	20 Pulses
Detent NO.	16C	30C	16C	20C

13. Number of Detent : Blank- None, 16C - 16 Detent

14. Series No.

TOP-UP INDUSTRY CORP.
www.top-up.com.tw

11mm Size Series Encoders

Water-Proof Type (IPX7)

TOP-UP

EC11MWHBFZ-B

IPX7
W/O Switch

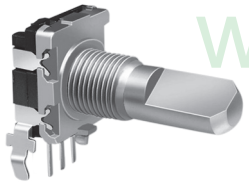

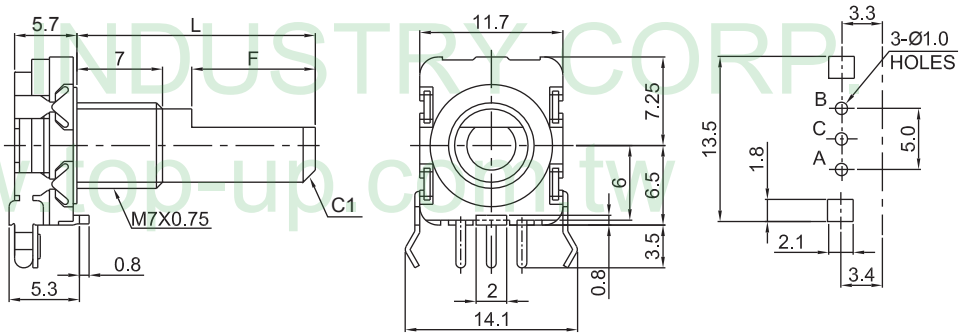

EC11MWSDHBFZ-B

IPX7
W/Switch 0.5mm

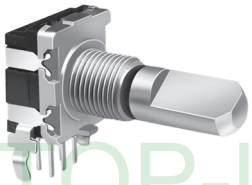

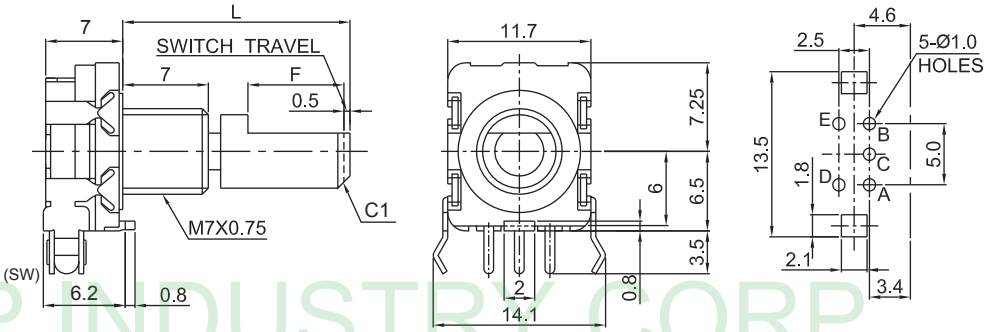

EC11MWSEHBFZ-B

IPX7
W/Switch 1.5mm

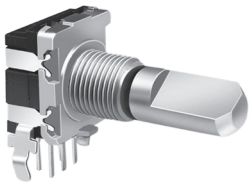

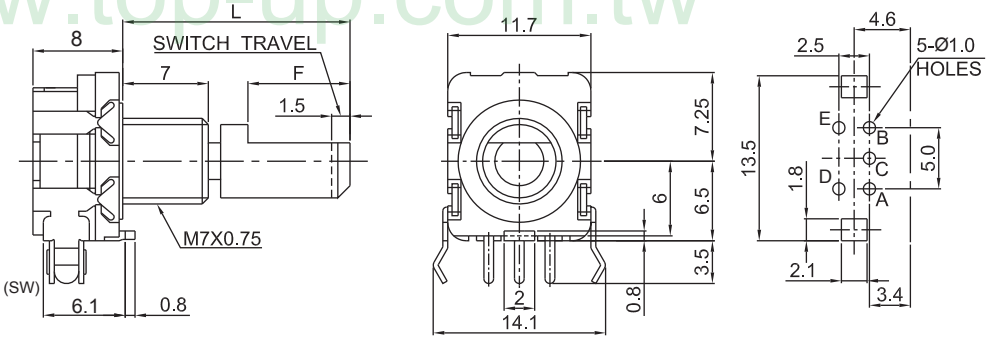

EC11MWVBF-D

IPX7
W/O Switch

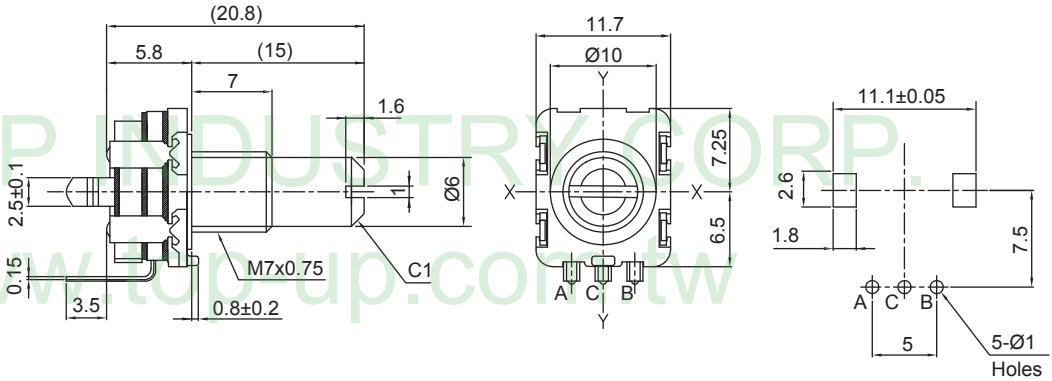

TOP-UP INDUSTRY CORP.
www.top-up.com.tw

11mm Size Series Encoders

Water-Proof Type (IPX7)

TOP-UP

EC11MWSDVBFX-D
IPX7
W/Switch 0.5mm

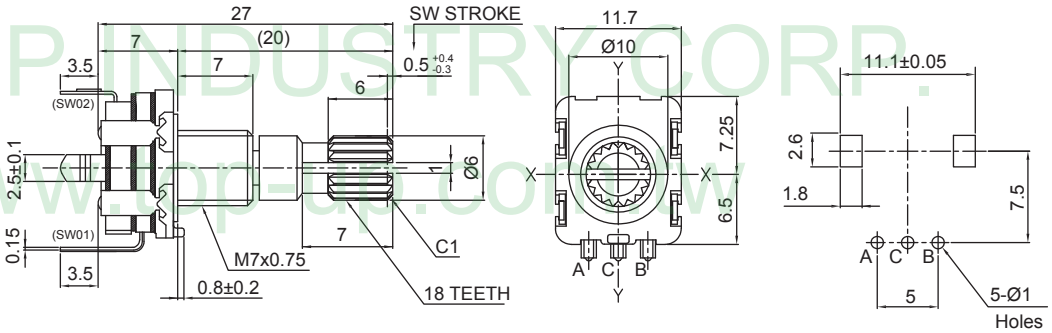

EC11MWSEVBFX-D
IPX7
W/Switch 1.5mm

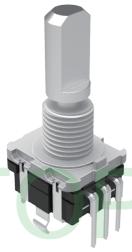

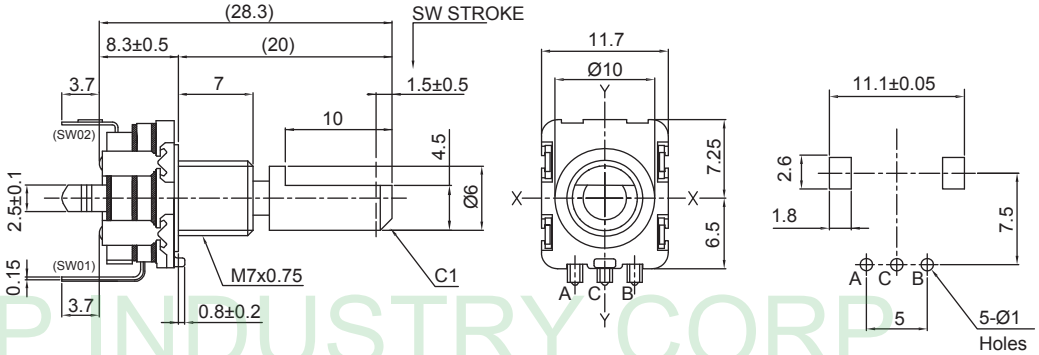

Soldering condition

▲Manual Soldering
- Bit temperature of soldering : 350°C or less.
- Application time of soldering : within 3s.

▲Dip soldering
Preheating :
- Surface temperature of board : 100°C or less.
- Preheating time : within 2 min.

Soldering :
- Solder temperature : 260±5°C
- Immersion time : 5±1 sec.

*Apply the above soldering process for 1 or 2 times.

TOP-UP INDUSTRY CORP.
www.top-up.com.tw

11mm Size Series Encoders

Water-Proof Type (IPX7)

TOP-UP

TOP-UP INDUSTRY CORP.

www.top-up.com.tw
www.electronicpartstaiwan.com

8F, NO.189, YUNG AN RD.,
TAOYUAN DIST.,TAOYUAN CITY 330,
TAIWAN, (R.O.C.)

TEL：+886-3-3380787
FAX：+886-3-3380767

sales@top-up.com.tw

TOP-UP INDUSTRY CORP.
www.top-up.com.tw