10mm Size Series Encoders

Rotary & With Teeth Type

TOP-UP

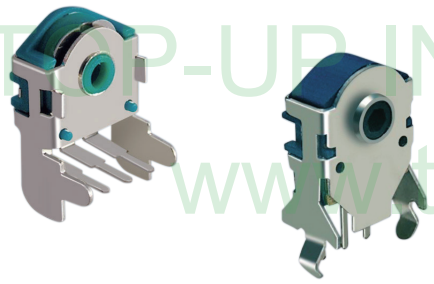

▲FEATURE
- Small body as thin as 5.1mm. Height from the shaft center to the product top is only 4mm.
- A long-life type that can operate more than 100,000 cycles..
- Taper is provided inside the through shaft.

▲APPLICATIONS
- Various controls for personal computer input device. AV equipment communication equipment etc.
- Keyboard's select control.

Common Specifications

Pulse	Number of detent	Phase difference (msec)	Chattering (msec)	Sliding noise (msec)	Insulation resistance	Dielectric strength	Detent torque (gf.cm)	Rotational life (cycle)
12	0	4min.	5max.	5max.	50VDC 50MΩ MIN	50V AC 1 min	50gf.cm max.	100,000
	24						10~50	

TOP-UP INDUSTRY CORP.
www.top-up.com.tw

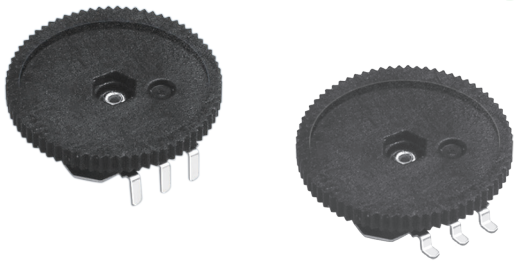

▲FEATURE
- Provides high-level operation feeling.
- Multi-detent is available.
- Available for reflow soldering.

▲APPLICATIONS
- Most suitable for the manual focus of compact camera recorder and iris adjustment.
- Most suitable for all controls of compact and low profile electronic equipment.

Common Specifications

Pulse	Number of detent	Phase difference (msec)	Chattering (msec)	Sliding noise (msec)	Insulation resistance	Dielectric strength	Rotational torque (gf.cm)	Rotational life (cycle)
12	0	4	8	8	50V DC 50MΩ MIN	50V AC 1 min	60 max.	10,000

TOP-UP

EC10 Series Code Explanation

EC10F H 9 F - B - 16*1.6 □ - 12 - 24C - □□□

1 2 3 4 5 6 7 8 9 10

TOP-UP INDUSTRY CORP.
www.top-up.com.tw

1. Product Lines
   EC10F - 10mm Size Rotary Encoder
   EC10J - 10mm Size With Teeth Type Rotary Encoder
2. Horizontal (H) Type or Vertical (V) Type

H	V	
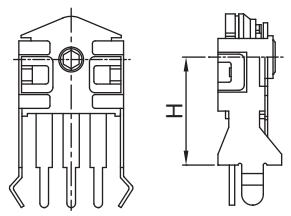	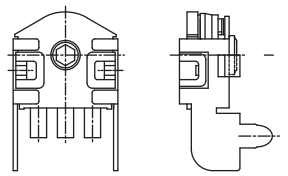	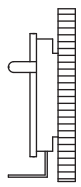

3. Mounting Height(H) : 5mm,7mm, 9mm,11mm (only EC10FH Series)
4. With Frame: "F"
5. Type of Terminal

P.C.B type				SMD type
	Horizontal		Vertical	SMT
	B		D	
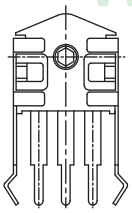	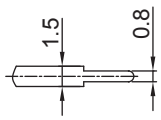	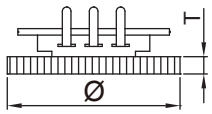	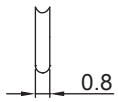	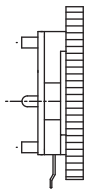

6. Shaft Diameter*Shaft Thickness (Only For EC10J Series)
7. Knob Angle (Only For EC10J Series)
8. Output Pulse: 12 - 12Pluse

Pulse NO.	12 Pulses
Detent NO.	24C

9. Number of Detent : Blank - None, 24C -24 Detent
10. Serial No.

TOP-UP INDUSTRY CORP.
www.top-up.com.tw

10mm Size Series Encoders

Rotary & With Teeth Type

TOP-UP

EC10FH9F1-B

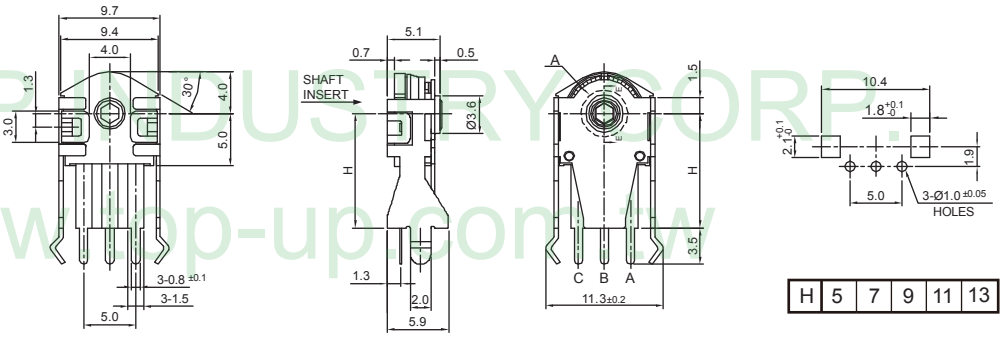

H	5	7	9	11	13

EC10FVF-D

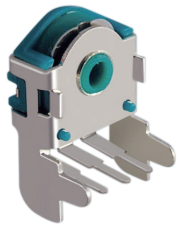

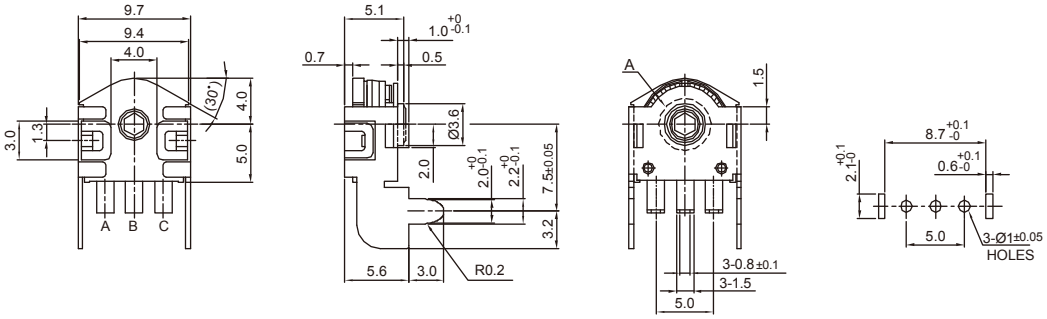

EC10JVF-D-16X1.6

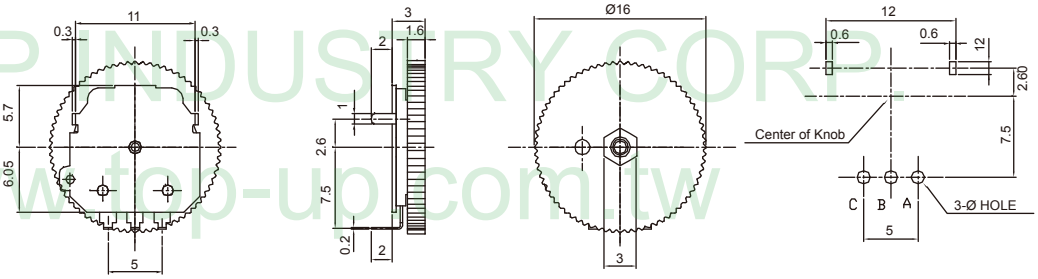

EC10JVF-D-16X2.2

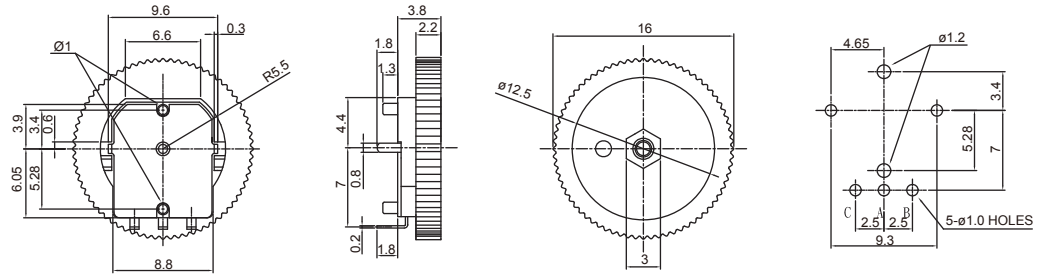

EC10JF-SMT

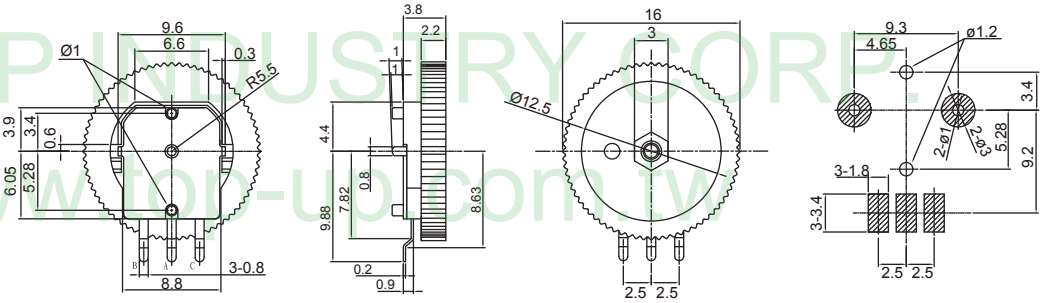

TOP-UP INDUSTRY CORP.
www.top-up.com.tw

10mm Size Series Encoders

Rotary & With Teeth Type

TOP-UP

Soldering condition

▲Manual Soldering
- Bit temperature of soldering : 350°C or less.
- Application time of soldering : within 3s.

▲Dip soldering

Preheating :
- Surface temperature of board : 100°C or less.
- Preheating time : within 2 min.

Soldering :
- Solder temperature : 260±5°C
- Immersion time : 5±1 sec.

*Apply the above soldering process for 1 or 2 times.

TOP-UP INDUSTRY CORP.

www.top-up.com.tw
www.electronicpartstaiwan.com

8F, NO.189, YUNG AN RD.,
TAOYUAN DIST.,TAOYUAN CITY 330,
TAIWAN, (R.O.C.)

TEL：+886-3-3380787
FAX：+886-3-3380767

sales@top-up.com.tw

TOP-UP INDUSTRY CORP.
www.top-up.com.tw