12mm Size Series Potentiometer
With Luminous Shaft Type

TOP-UP

▲FEATURE
- Outset molding with resin around the resistor prevents flux build-up.
- Red、green、blue and orange LED colors are available.

▲APPLICATIONS
- Ideal for volume, tone and balance control of car audio equipment.

Common Specifications

Model	Single Color	Dual Color	Triple Color
Total resistance (KΩ)	5, 10, 20, 50, 100, 250		
Total resistance tolerance	±20%		
Resistance taper	A, B, C, D, E, K, W		
Rated power	0.05W		
Maximum operating	50V AC 10V DC		
Total rotational angle	300±5°		
Rotational torque	10~100gf.cm	50gf.cm Max	50gf.cm Max
Rotation stopper strength	3Kgf.cm		
Rotation life (cycle)	30,000 cycles		

Switch Specifications

Model	Single Color	Dual Color	Triple Color
Switch rating	—	D.C. 5V 10mA	
Switch cntact resistance	—	100 mΩ Max	
Switch operating method	—	Push type	
Switch contact arrangement	—	(S.P.S.T) Push on	
Switch stroke	—	0.3 (±0.15) mm	
Switch strength	—	450±200gf	
Switch life	—	20,000 cycles	

12PL Series Code Explanation

12PL	□□	SD	1	H	B	-	B	-	20	K	-	B	50K	-	□□□
1	2	3	4	5	6		7		8	9		10	11		12

1. Product Lines of 12PL (12mm With Luminous Shaft Type)
2. With LED

Single Color	Code	B	R	O	D	G	L	W
	Color	Blue	Red	Orange	Dark Orange	Green	Lawngreen	White
Dual Color	Code	BG	BO	GR	BR	GO	WR	
	Color	Blue/Green	Blue/Orange	Green/Red	Blue/Red	Green/Orange	White/Red	
Triple Color	Code	RGB						
	Color	Red / Green / Blue						

3. With Switch : SD - Travel 0.5mm
4. Number of Unit : 1 - Single Unit
5. Horizontal(H) Type or Vertical(V) Type
6. With Bushing :

B	5B
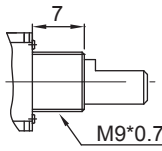	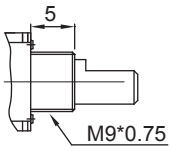

7. Type of Terminal : B - P.C.B Type
8. Shaft Length
9. Type of Shaft

F - Type			K - Type		
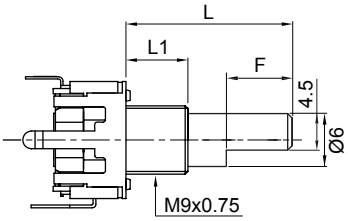			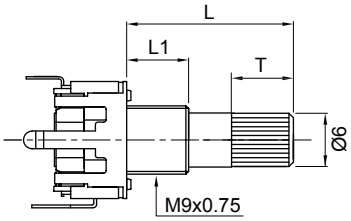		
L	15	20	L	15	20
F	7	7	T	7	7
L1	5	7	L1	5	7

10. Type of Taper
11. Resistance Value
12. Serial No.

12mm Size Series Potentiometer

With Luminous Shaft Type

TOP-UP

12PL□1HBF-B
Single Color LED
Single unit

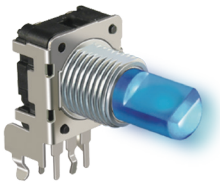

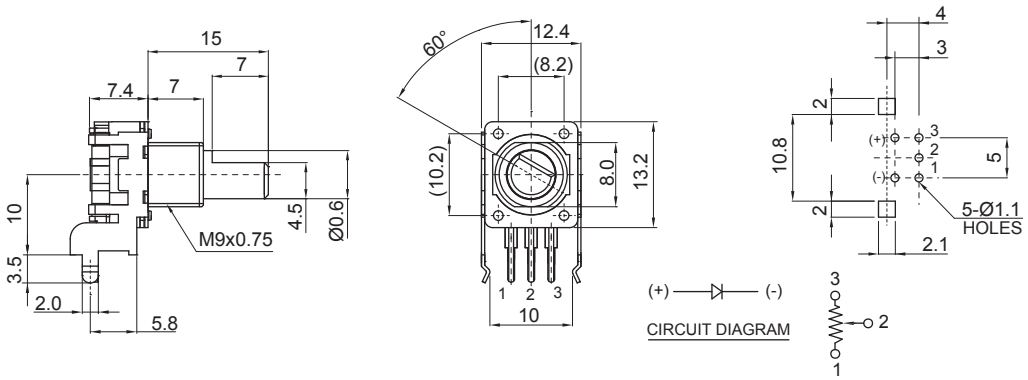

12PL□1VBF-D
Single Color LED
Single unit

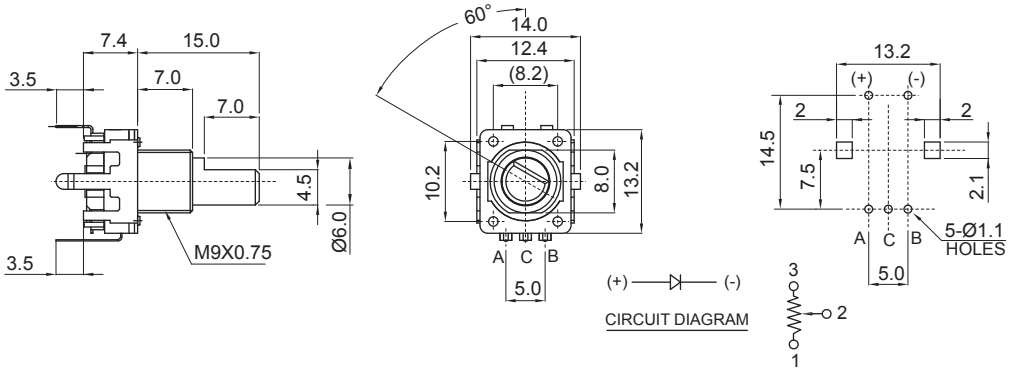

12PL□□SD1HBF-B
Dual Color LED
Single unit, With switch 0.5mm

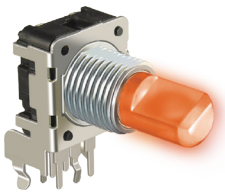

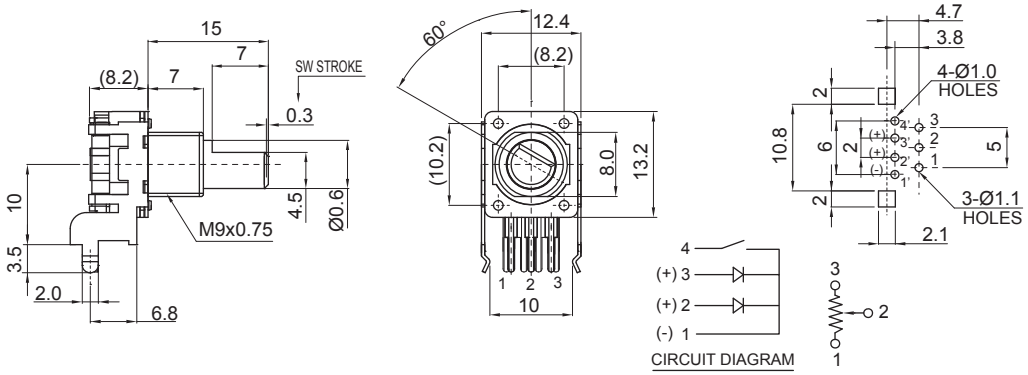

12PL□□SD1VBF-D
Dual Color LED
Single unit, With switch 0.5mm

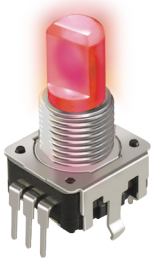

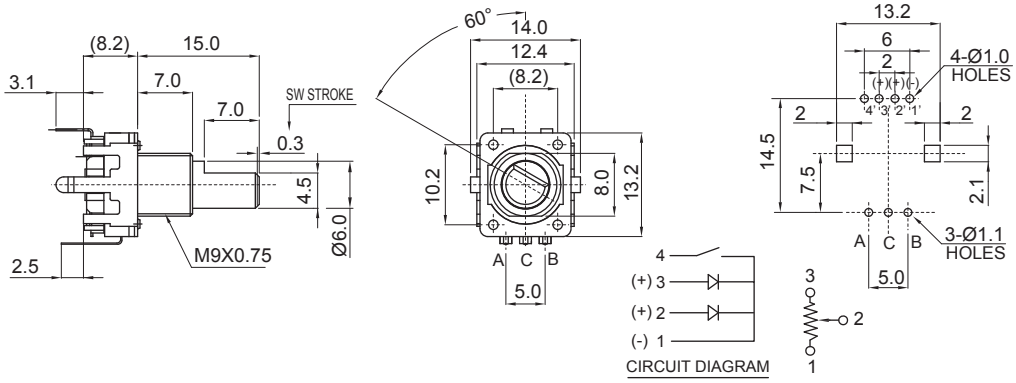

12mm Size Series Potentiometer
With Luminous Shaft Type

TOP-UP

12PLRGBSD1HBF-B
Triple Color LED
Single unit, With switch 0.5mm

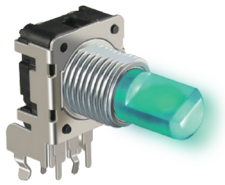

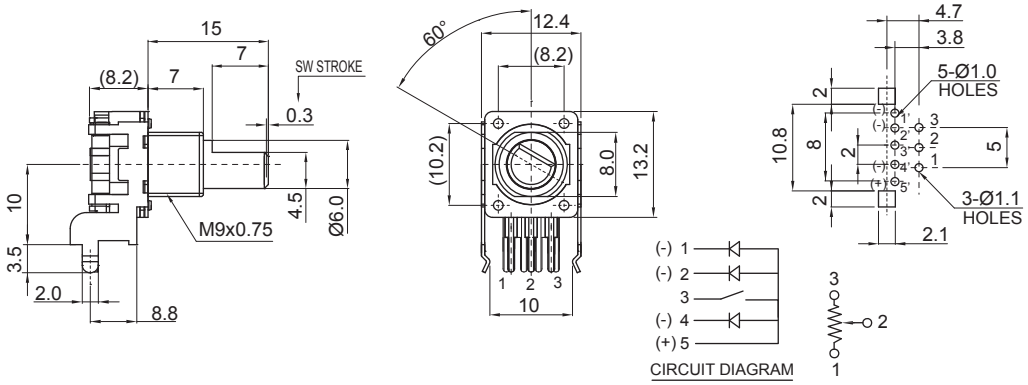

12PLRGBSD1VBF-D
Triple Color LED
Single unit, With switch 0.5mm

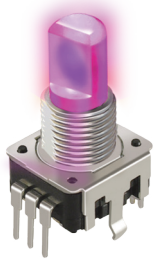

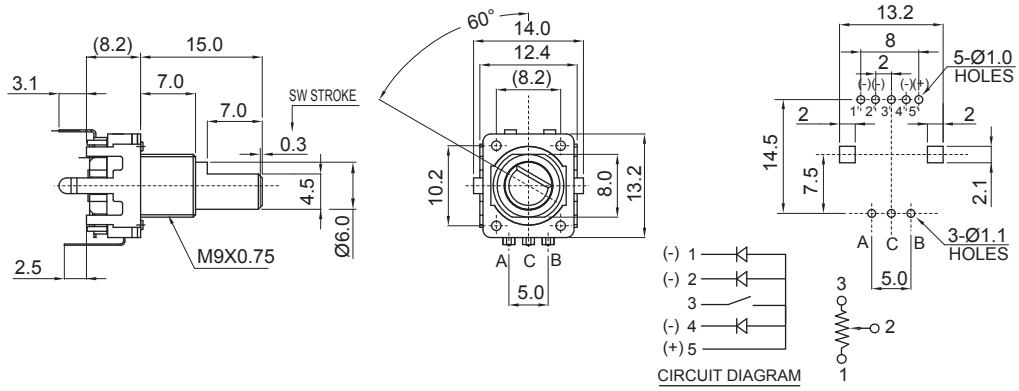

LED Specifications

Single color LED	Two colors LED	Triple colors LED
(+) —▷— (-)	(+) —▷— (-) (+) —▷—	(-) —▷— (-) —▷— (+) (-) —▷—
Blue	Blue / Orange	Red / Green / Blue
Red	Green / Red	
Dark orange	Blue / Red	
Green	Blue / Green	
Lawngreen	Green / Orange	
Orange	White / Red	
White	—	

12mm Size Series Potentiometer

With Luminous Shaft Type

TOP-UP

Taper

TAPERS B SERIES

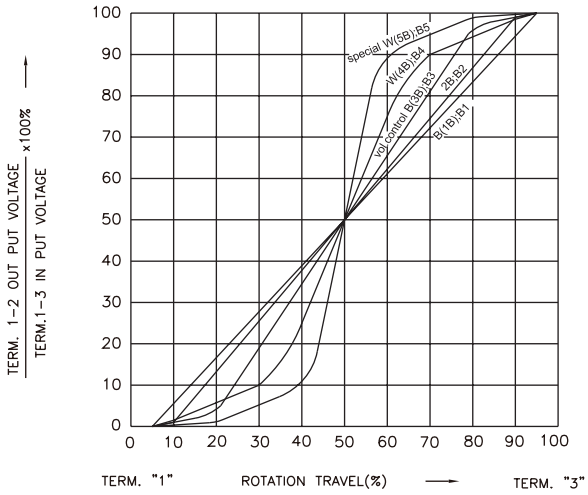

TAPERS A & C WITH 50% TAP

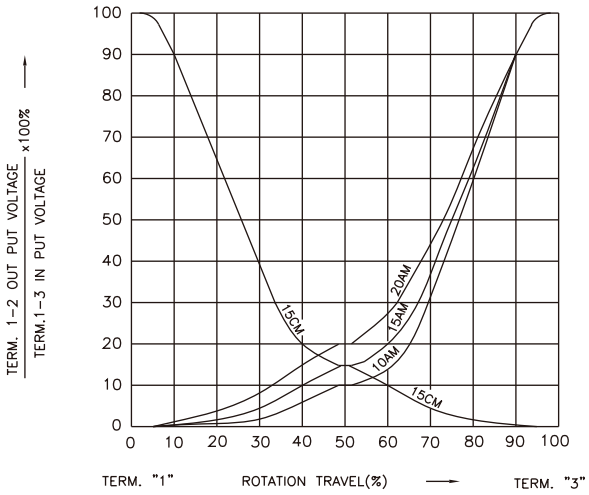

TAPERS A SERIES

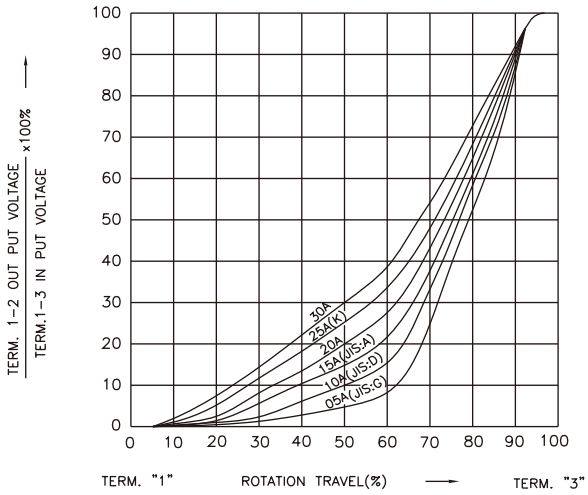

TAPER M & N

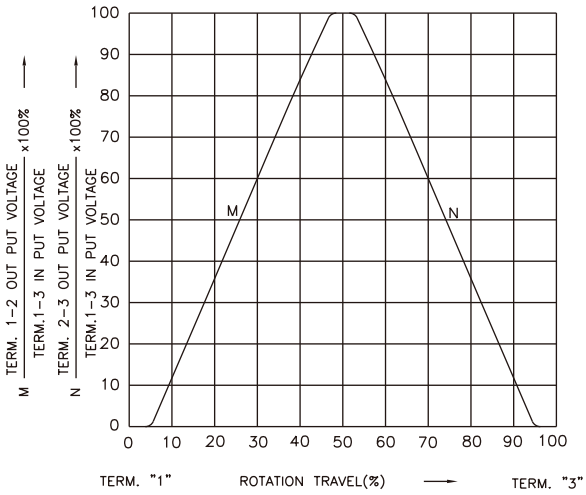

TAPERS C SERIES

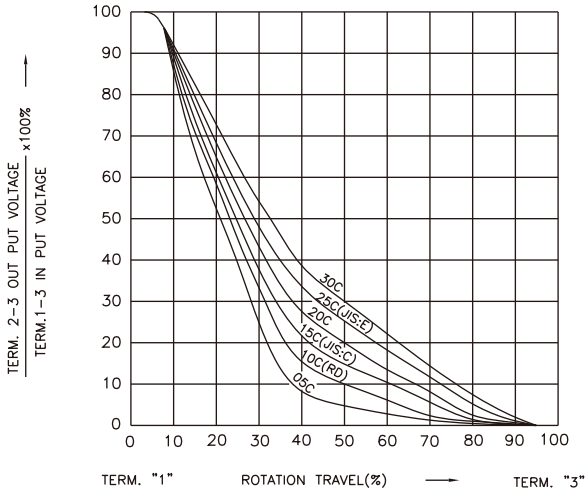

12mm Size Series Potentiometer
With Luminous Shaft Type

TOP-UP

Soldering condition

▲Manual Soldering
- Bit temperature of soldering : 350°C or less.
- Application time of soldering : within 3s.

▲Dip soldering

Preheating :
- Surface temperature of board : 100°C or less.
- Preheating time : within 2 min.

Soldering :
- Solder temperature : 260±5°C
- Immersion time : 5±1 sec.

*Apply the above soldering process for 1 or 2 times.

TOP-UP INDUSTRY CORP.

www.top-up.com.tw
www.electronicpartstaiwan.com

8F, NO.189, YUNG AN RD.,
TAOYUAN DIST.,TAOYUAN CITY 330,
TAIWAN, (R.O.C.)

TEL：+886-3-3380787
FAX：+886-3-3380767

sales@top-up.com.tw