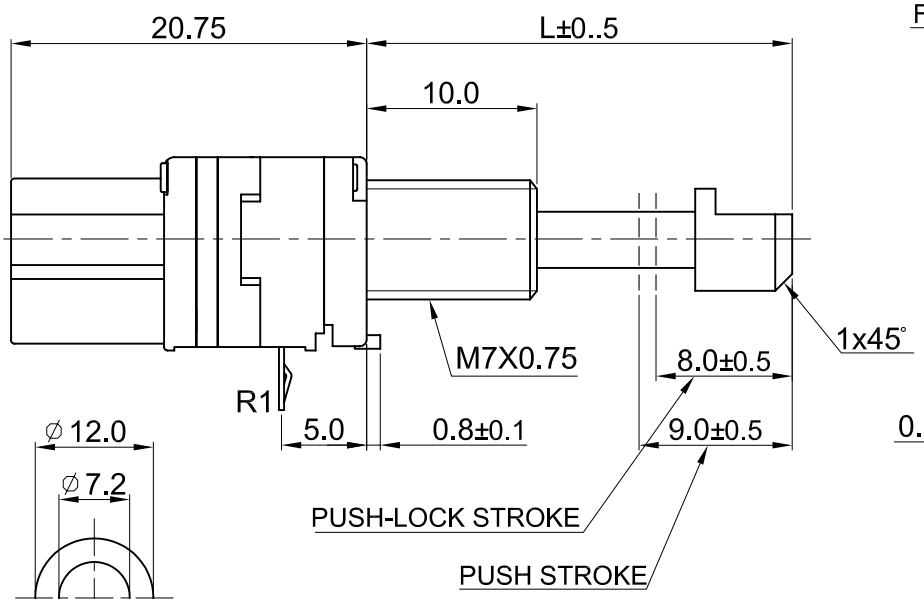

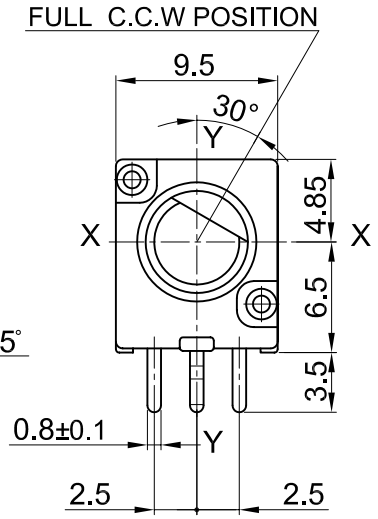

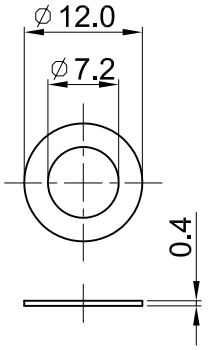

WASHER (1.3/1)

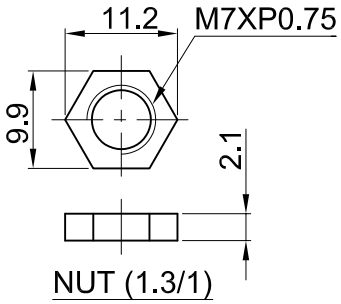

NUT (1.3/1)

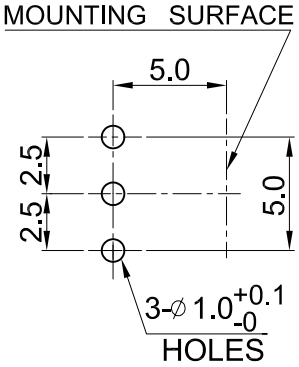

P.C.B MOUNTING HOLES DETAIL

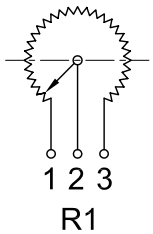

CIRCUIT

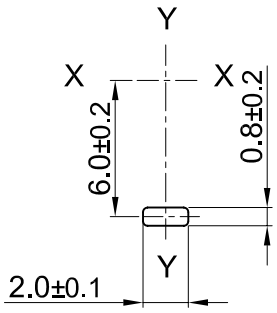

LOCATING LUG DETAIL

S-TYPE

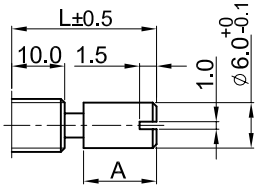

Code	25S	30S	35S
L	25	30	35
A	5.7	10.7	15.7

F-TYPE

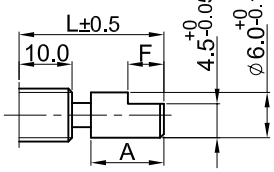

Code	25F	30F	35F
L	25	30	35
F	4.5	7	12
A	5.7	10.7	15.7

K-TYPE

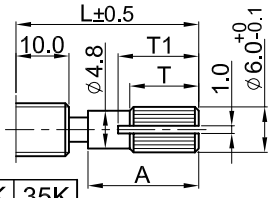

Code	25K	30K	35K
L	25	30	35
A	5.7	10.7	15.7
T1	4	7	13
T	3	6	12

RoHS Compliance

				MODEL NAME:	9M1PSHB-B-[ ]- -16Y
△				Third Angle Projection	DRAWING NO. 9M-16Y-36
△					CODE NO.
△					PATH: POT.\Rotary\9mm\9M\Spec.
△	2006.5.22	zhou gui rong	圖號更改,原:9M-078;增加WASHER AND NUT		

TOLERANCES		UNIT	SCALE	APPROVED SIGNATURES	DRAWN BY	CHECKED BY	APPROVED BY
less than 10	±0.3	m/m			周貴榮	龔俊利	周貴榮
10-100	±0.5	VERSION					
above 100	±0.8						
angular dimension	±5°	B			2006.5.22	2006.5.22	2006.5.22

TOP-UP INDUSTRY CORP.