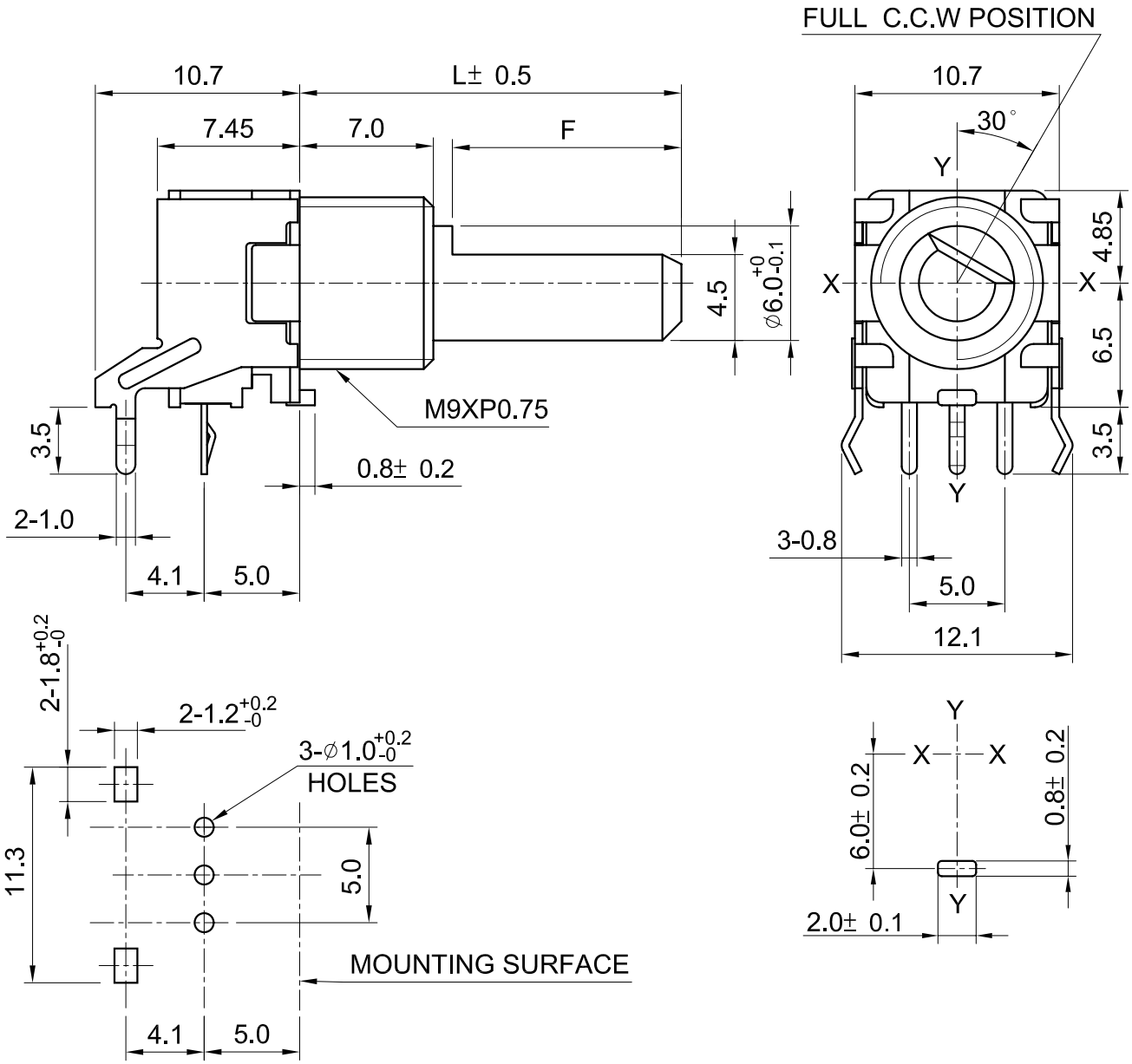

SHAFT LENGTH:

CODE	15F/15FM	20F/20FM	25F/25FM
L	15	20	25
F	7	12	12

MATERIAL OF SHAFT:

CODE	MATERIAL
F	ALUMINUM ALLOY
FM	ZINC ALLOY

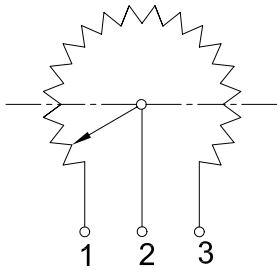

CIRCUIT

MODEL NAME:	9M1HBF-B-[ ]F[ ]- -16Y				
DRAWING NO.	9M-16Y-22				
CODE NO.					
PATH:	POT.\Rotary\9mm\9M\Spec				
Third Angle Projection					
TOLERANCES		UNIT	SCALE	APPROVED SIGNATURES	DRAWN BY	CHECKED BY	APPROVED BY
less than 10	± 0.3	m/m	3/1		盧 霞	周貴榮	王文娟
above 10-100	± 0.5	VERSION					
above 100	± 0.8						
angular dimension	± 5°	A			2005.9.9	2005.9.9	2005.9.9

TOP-UP INDUSTRY CORP.